Layout of Narail

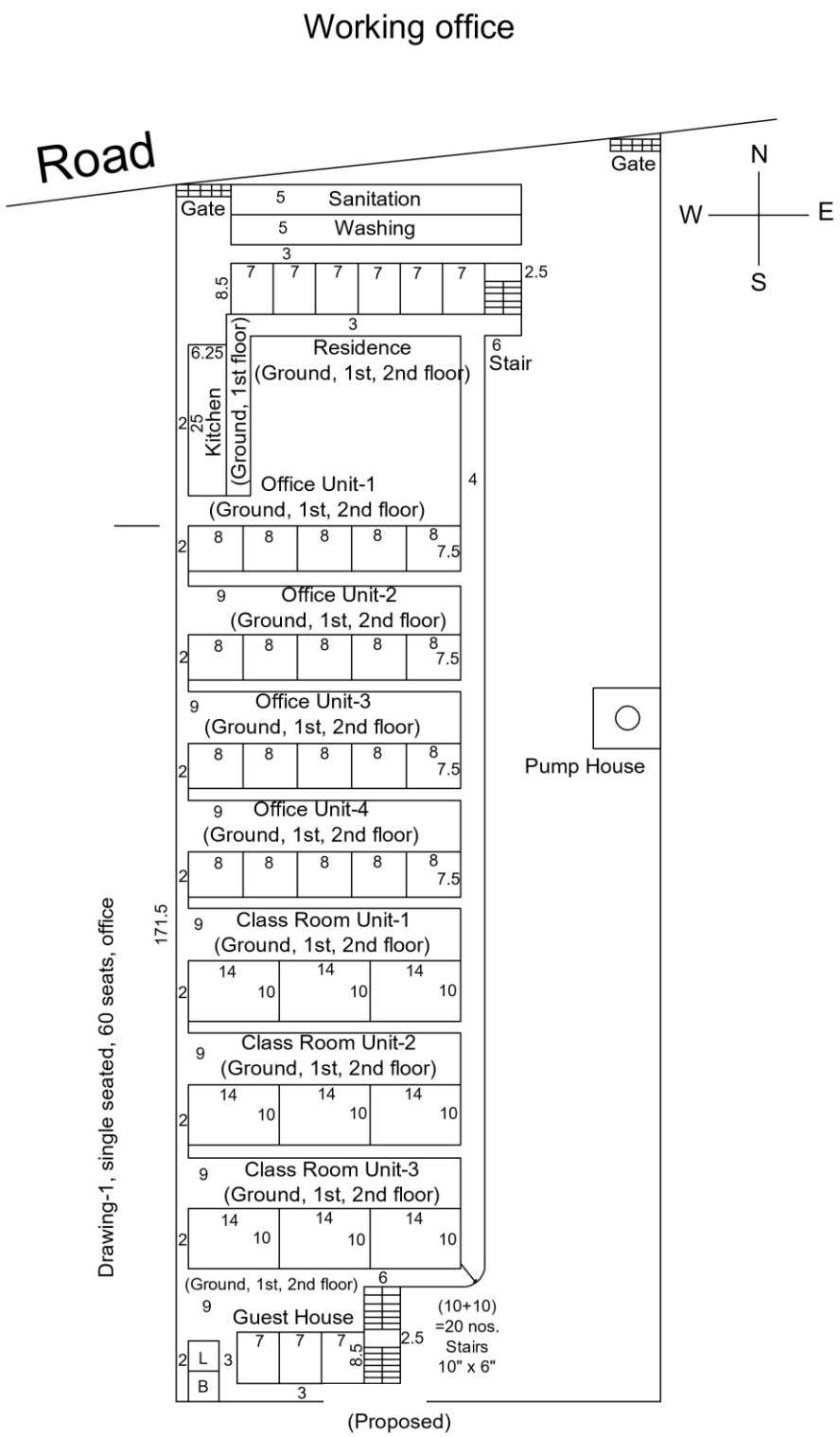

Local Ministry of Education (LME), Bangladesh
Village: Nanikhir, Post Office: Mulia, District: Narail
Area of land=40 decimal=221x80=17424 sqft (Female Section)

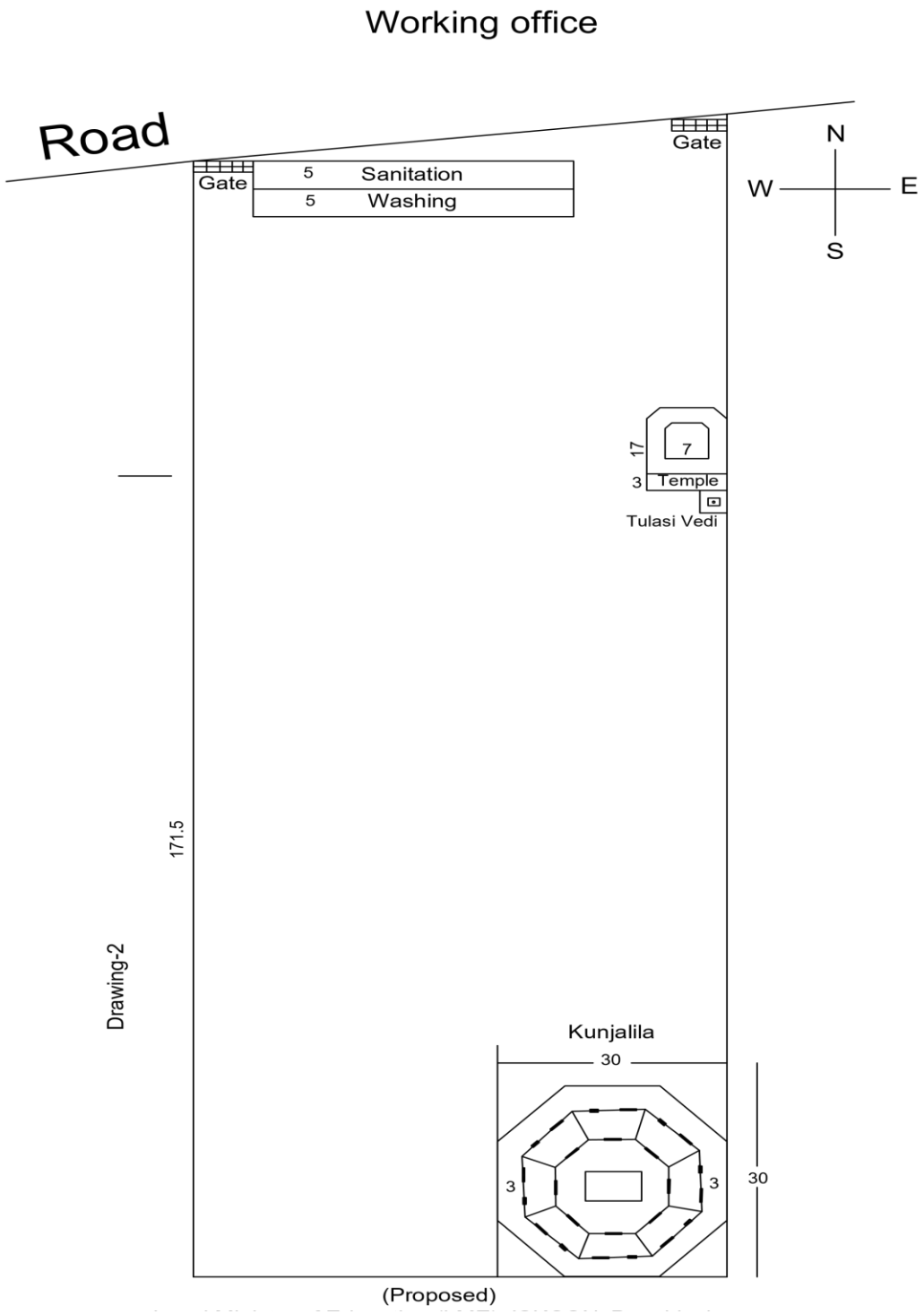

Local Ministry of Education (LME), Bangladesh
Village: Nanikhir, Post Office: Mulia, District: Narail
Area of land=40 decimal=221x80=17424 sqft (Female Section)